CONTENTS

INTRODUCTION 1	INSTALLATION 3
STAND ALONE MODE 5	CONTROLLER MODE 11
WIEGAND READER MODE 13	ADVANED APPLICATION 15

INTRODUCTION

The SK2/SK5 is a single door multifunction standalone access controller or a Wiegand output reader. It uses Atmel MCU assuring stable performance. The operation is very user-friendly, and low-power circuit makes it long service life.

The SK2/SK5 supports 1,000 users (998 common users + 2 panic users), all user data can be transferred from one to another. It supports multiaccess modes in either card access, PIN access, Card + PIN access, or multi cards/PINs access. It has extra features including block enrollment, Interlocked, Wiegand 26~37 bits Interface…etc.

Features

> Waterproof, conforms to IP66
> One relay, keyboard programmer
> 1,000 users (998 common users + 2 panic users)
> PIN length: 4~6 digits
> Cardtype:
  EM version: 125KHz EM card
  HID & EM version: 125KHz HID & EM cards
> Wiegand 26~37 bits input & output
> Can be used as Wiegand reader with LED & buzzer output
> Card block enrolment
> Tri-colour LED status display
> Integrated alarm & buzzer output
> Pulse mode, Toggle mode
> User data can be transferred
> 2 devices can be interlocked for 2 doors
> Built in light dependent resistor (LDR) for anti tamper
> Backlit keypad
> Low temperature resistance(-40℃)
>Material:
SK2: ABS Enclosure
SK5: Zinc- Alloy Enclosure, anti-vandal
> https: //aros.kz

Specifications

User Capacity CommonUser Panic User	**1000** 998 2
Operating Voltage Idle Current	**9~18VDC** <35mA
Proximity Card Reader Radio Technology ReadRange	**EM or HID & EM** 125KHz Proximity Card 2~6 cm
Wiring Connections	Relay Output, Exit Button, Alarm, Door Contact, Wiegand Input, Wiegand Output
Relay Adjustable Relay Output Time Lock Output Load	**One (NO, NC, Common)** 0~99 Seconds (5 seconds default) 2 Amp Maximum
Wiegand Interface Wiegand Input Wiegand Output PIN Output	**Wiegand 26-37 bits** (Factory Default: wiegand 26bits, 4 bits) 26-37 bits 26-37 bits 4 bits, 8 bits(ASCII), 10 digits Virtual Number
Environment Operating Temperature Operating Humidity	**MeetsIP66** -40℃~ 60℃ (-40°F ~ 140°F) 0~98%RH
Physical Colour Dimensions Unit Weight Shipping Weight	**ABS (SK2)** **Zinc-Alloy (SK5)** Black(SK2) / Silver(SK5) L122 x W50 x D21mm(SK2) L148 x W56 x D22.5mm(SK5) 165g(SK2) /285g(SK5) 260g(SK2) /350g(SK5)

Carton Inventory

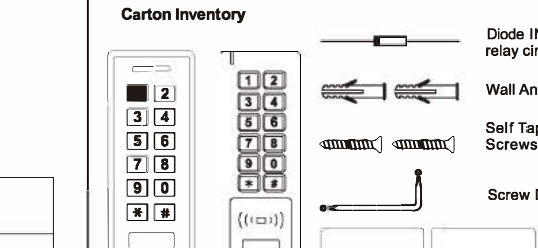

INSTALLATION

> Remove the back coverfrom the unit
> Drill 2 holes(A,C) on the wall for the screws and one hole forthe cable
> Knock the supplied rubber bungs to the screw holes(A,C)
> Fix the back cover firmly on the wall with 4 flat head screws
> Thread the cable through the cable hole(B)
> Attach the unit to the back cover

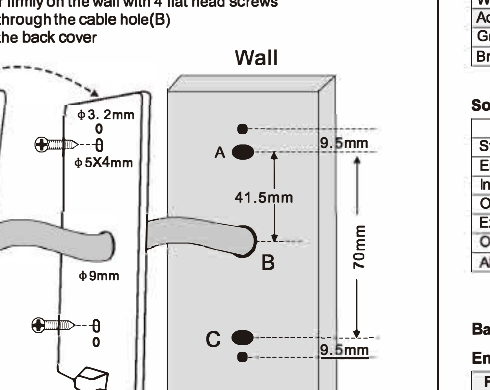

Wiring

Wire Color	Function	Notes
Basic Standalone Wiring		
Red	DC+	9-18 V DC Power Input
Black	GND	Negative Pole of DC Power Input
Blue	Relay NO	Normally Open Relay Output (install diode provided)
Purple	Relay Common	Common Connection for Relay Output

Orange	Relay NC	Normally Closed Relay Output (Install diode provided)
Yellow	OPEN	Request to Exit(REX) Input
Pass-Through Wiring (Wiegand Reader or Controller)		
Green	Data 0	Wiegand Output (Pass-through) Data 0
White	Data 1	Wiegand Output (Pass-through) Data 1
Advanced Input and Output Features		
Grey	Alarm Output	Negative contact for Alarm
Brown	Contact Input	Door/Gate Contact Input (Normally Closed)

Sound and Light Indication

Operation Status	LED	Buzzer
Stand by	Red light bright	—
Enter into programming mode	Red lightshines	Onebeep
In the programming mode	Orange light bright	Onebeep
Operation error	—	Three beeps
Exit from the Programming mode	Red light bright	Onebeep
Open lock	Green light bright	One beep
Alarm	Red lightShines quickly	Beeps

Basic Configure

Enter and Exit Program mode

Programming Step	Keystroke Combination
Enter Program Mode	* (Master Code) # (Factory default is 123456)
Exit Program Mode	*

Set Master Code

Programming Step	Keystroke Combination
1. Enter Program Mode	* (Master Code) #
2. Update Master Code	0 (New Master Code) # (Repeat New Master Code) # (Master code is any 6 digits)
3. Exit Program Mode	*

Set the Working Mode

Notes: the SK2/SK5 has 3 working modes: Standalone Mode, Controller Mode, Wiegand Reader Mode, choose the mode you use. (Factory default is Standalone Mode / Controller Mode)

Programming Step	Keystroke Combination
1. Enter Program Mode	* (Master Code) #
2. Standalone/ Controller Mode OR 2. Wiegand Reader Mode	7 2 # (Factory default) 7 3 #
3. Exit	*

STANDALONE MODE

The SK2/SK5 can be worked as Standalone Readerfor single door.
(Factory default mode)—7 2 #

Connection Diagram

Common Power Supply

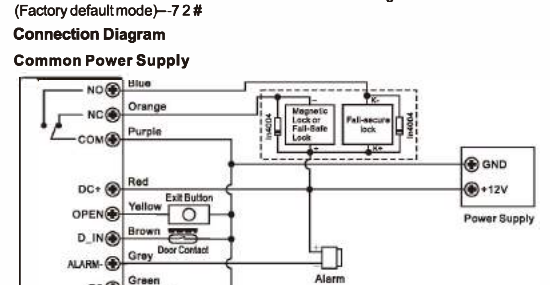

Attention:
Install a 1N4004 or equivalent diode is needed when use a common power supply, or the keypad might be damaged. (1N4004 is included in the packing)

Access Control Power Supply:

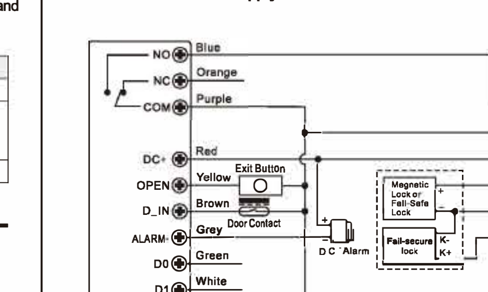

Programming

Programming will vary depending on access confirguration. Follow the instructions according to your access configuration.

Notes:
> User ID number: Assign a user ID to the access card / PIN in order to track it. The common user ID number can be any number fom 0~997, the panic user ID is from 998~999. IMPORTANT: User IDs do not have to be proceeded with any leading zeros. Recording of User ID is critical. Modifications to the user requlre the User ID be avallable.
> Proximity Card :
EM version: 125 KHz industry standard 26bits EM card
HID & EM version: 125 KHz industry standard 26bits HID & EM cards
> PIN: Can be any 4~6 digits except 8888 which is reserved.

Add Common Users

Programming Step	Keystroke Combination
1. Enter Program Mode	* (Master Code) #
Add Card User	
2. Add Card: Using Auto ID (Allows the SK2/SK5 to assign Card to next available User ID number) **OR** 2. Add Card: Select Specific ID (Allows Master to define a specific User ID to associate the card to) **OR** 2. Add Card: by Card Number **OR** 2. Add Card: Block Enrolment (Allows Master to add up to 998 cards to the Reader in a single step) Takes 2 minutes to program.	1 (Read Card) # The cards can be added continuously. 1 (User ID) # (Read Card) # (User ID is any number from 0~997) 1 (Input 8/ 10digits Card number) # 1 (User ID) # (Card quantity) # (The first card number) # Cards' number must be consecutive; Card quantity = number of cards to be enrolled.
Add PIN User	
2. Add PIN: Using Auto ID (Allows the SK2/SK5 to assign PIN to next available User ID number)	1 (PIN) # The PINs can be added continuously. (PIN: 4~6 digits)
2. Add PIN: Select Specific ID (Allows manager to define a specific User ID to associatethe PIN to)	1 (User ID) # (PIN) # The user ID is any number from 0~997.
3. Exit	*

Add Panic Users

Programming Step	Keystroke Combination
1. Enter Program Mode	* (Master Code) #
2. Add Card: OR 2. Add PIN:	1 (User ID) # (Read Card / Input 8/ 10 digits Card number) # 1 (User ID) # (PIN) # (User ID is any number from 998~999)
3. Exit	*

Change PIN Users

Programming Step	Keystroke Combination
Note: Below is done outside programming mode, users can undertake this themselves	
2. Change PIN: By Card (Therewill auto allocate PIN (8888) to cards when adding)	* (Read Card) (Old PIN) # (New PIN) # (Repeat New PIN) #
2. Change PIN: By PIN	* (UserID) # (Old PIN) # (NewPIN) # (Repeat New PIN) #
3. Exit	*

Delete Users

Programming Step	Keystroke Combination
1. Enter Program Mode	* (Master Code) #
Delete Card User - Common	
2. Delete Card – By Card **OR** 2. Delete Card – By ID number **OR** 2. Delete User – By Card number	2 (Read Card) # The cards can be deleted continuously. 2 (User ID) # 2 (Input 8/ 10digits Card number) #
Delete PIN User - Common	
2. Delete PIN – by PIN **OR** 2. Delete PIN – By ID number	2 (Input PIN) # 2 (User ID) #
Delete Panic User	
2. Delete Panic Card User **OR** 2. Delete Panic PIN User	2 (User ID) # 2 (User ID) #
Delete All Users	
Delete All User	2 (Master Code) #
3. Exit	*

Set Relay Configuration

The relay configuration sets the behaviour of the output relay on activation.

Programming Step	Keystroke Combination
1. Enter Program Mode	* (Master Code) #
2. Pulse Mode OR 2. Toggle Mode	3 (1-99) # (factory default) The relay time is 1-99 seconds. (1 is 50mS.) (Default is 5 seconds) 3 0 # Sets the relayto ON/OFF Toggle mode
3. Exit	*

Set Access Mode

For Multi cards/ PINs access mode, the interval time of reading cards/inputting PINs can not exceed 5 seconds, or else, the SK2/SK5 will exit to standby automatically.

Programming Step	Keystroke Combination
1. Enter Program Mode	* (Master Code) #
2. Card access **OR** 2. Card + PIN access **OR** 2. Card or PIN access **OR** 2. Multi cards/ PINs access	4 0 # 4 1 # 4 2 # 4 3 (2~9) # (Only after reading 2~9 cards or inputting 2~9 PINs, the door can be opened)
3. Exit	*

Simplified Instruction	
Function Description	**Operation**
Enter the Programming Mode	* - 123456 - # then you can do the programming (123456 isthe factory default master code)
Change the Master Code	0 - New Code - # - Repeat the New Code - # (code: 6 digits)
Add Card User	1 - Read Card - # (can add Cards continuously)
Add PIN User	1 - PIN - #
Delete User	2 - Read Card - # for Card User 2 - PIN - # for PIN user
Exit from the Programming Mode	*
How to release the door	
Card User	Read Card
PIN User	Input PIN #

Set Strike-out Alarm

The strike-out alarm will engage after 10 failed entry attempts (Factory is OFF). It can be set to deny access for 10 minutes after engaging or disengage only after entering a valid card/ PIN or Master code.

Programming Step	Keystroke Combination
1. Enter Program Mode	* (Master Code) #
2. Strike-Out OFF **OR** 2. Strike-Out ON **OR** 2. Strike-Out ON (Alarm) Setalarm time	6 0 # (factory default) 6 1 # Access will be denied for 10 minutes 6 2 # 5 (0 ~ 3) # (factory default is 1 minute) Enter Master code # or valid user card / PIN to silence
3. Exit	*

Set Audible and Visual Response

Programming Step	Keystroke Combination	
1. Enter Program Mode	* (Master Code) #	
2. Control Sounds **OR** 2. Control LED **OR** 2. Control Keypad Backlit	OFF = 7 0 # OFF = 7 4 # OFF = 7 6 #	ON = 7 1 # ON = 7 5 # ON = 77 # (Factory defaults areON)
3. Exit	*	

Set Card Reading Type (This step can only be applied to HID & EM version)

Programming Step	Keystroke Combination
1. Enter Program Mode	* (Master Code) #
2. Read HID & EM card **OR** 2. Read EM card ONLY **OR** 2. Read HID card ONLY	9 3 # (factory default) 9 4 # 9 5 #
3. Exit	*

Master Cards Usage

Using Master Cards to add and delete card / PIN users	
Add a User	1. **(Read Master Add Card)** 2. **(Read User Card) / (Input User PIN #)** Repeat Step 2 for additional user cards / PINs 3. **(Read Master Add Card)**
Delete a User	1. **(Read Master Delete Card)** 2. **(Read User Card) / (Input User PIN #)** Repeat Step 2 for additional user cards/ PINs 3. **(Read Master Delete Card)**

Users Operation & Reset to Factory Default

> Open the door: Read valid user card or inputting valid user PIN
> Remove Alarm: Read valid usercard or inputting valid user PIN, or input Master Code #
> To reset to factory default & Add Master Cards: power off, press the Exit Button, hold it and poweron, therewill be two beeps, and the LED light turns into yellow, release the exit button, then read anytwo 125KHz EM cards or HID cards, the LED will turn into red, means reset to factory default successfully. Of the two cards reading, the 1st one is Master Add Card, the 2nd one is the Master Delete Card.

Remarks:
① If no Master Cards added, must press the Exit Button for at least 10 seconds before release.
② Reset to factory default, the user's information is still retained.

CONTROLLER MODE

The SK2/SK5 can work as Controller, connected with the external Wiegand reader. (Factory default mode)—7 2 #

Connection Diagram

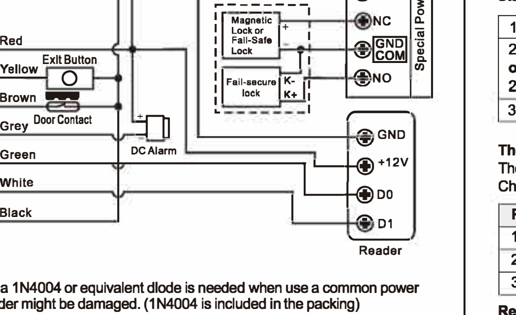

Attention: Install a 1N4004 or equivalent diode is needed when use a common power supply, orthe reader might be damaged. (1N4004 is included in the packing)

Set Wiegand Input Formats

Please set the Wiegand input formats according to the Wiegand output format of the external Reader.

Programming Step	Keystroke Combination
1. Enter Program Mode	* (Master Code) #
2. Wiegand intput bits	8 (26~37) # (factory default is 26 bits)
3. Exit	*

Programming
> Basic Programming is the same as Standalone Mode
> There are some exceptions for your attention:
The SK2/SK5 connected with External Card Reader:
- If EM card reader or HID card reader: users can be added/deleted on either the SK2/SK5 or external reader.
- If Mifare reader: users **can only be** added/deleted on external reader.

The SK2/ SK5connected with Fingerprint Reader:

Forexample:
Connect F2 as the fingerprint reader to the SK2/SK5, it is of two steps to enroll the valid fingerprint.
Step 1: Add the Fingerprint (A) on F2
Step 2: Add the same Fingerprint(A) on the SK2/SK5:

1	Enter Program Mode: * **(Master Code) #**
2 or 2	**1 (Press Fingerprint Aonce on F2) #** (ID auto allocated) **1 (User ID) # (Press Fingerprint A on F2) #** (Select specific ID)
3	Exit: *

The SK2/SK5 connected with Keypad Reader:

The keypad reader can be 4 Bits, 8 Bits (ASCII), or 10 Bits output format.
Choose the below operation according to the PIN output format of your reader.

Programming Step	Keystroke Combination
1. Enter Program Mode	* (Master Code) #
2. Wiegand input bits	8 (4 or 8 or 10) # (factorydefault is 4 bits)
3. Exit	*

Remarks: 4 means 4 bits, 8 means 8 bits, 10 means 10 digits virtual number.

> Add PIN Users:
To add PIN users, after enterinto programming mode onthe SK2/SK5 , PIN(s) can be input/ added on either the SK2/SK5 controller or the external Keypad Reader.

> Delete PIN Users: the same way as add users.

WIEGAND READER MODE

The SK2/SK5 can work as Standard Wiegand Reader, connected to the third party Controller— 7 3 #

Notes:
The EM version reads EM card only, while the HID & EM version can be set to read HID & EM cards, or HID card only, or EM card only. Factory default card type of the HID & EM card, if you want to change the type, please set the SK2/SK5 to Standalone Mode (7 2 #) and then set the type. (See page 11 for setting card type).

Connection Diagram

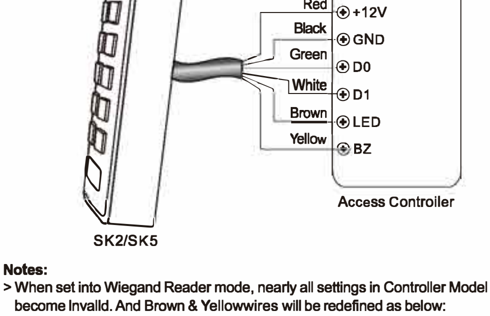

Notes:
> When set into Wiegand Reader mode, nearly all settings in Controller Model will become Invalid. And Brown & Yellowwires will be redefined as below:
- Brown wire: Green LED light control
- Yellow wire: Buzzer control

> If you need to connect Brown/Yellow wires:
When the input voltage for LED is low, the LED will turn into Green; and when the Input voltage for Buzzer Is low, It will sound.

Set Wiegand Output Formats

Please set the Wiegand output formats of Reader according to the Wiegand intput formats of the Controller.

Programming Step	Keystroke Combination
1. Enter Program Mode	* (Master Code) #
2. Wiegand output bits PIN output bits	8 (26~37) # (factory default is 26 bits) 8 (4 or 6 or 10) # (factory default is 4 bits)
3. Exit	*

ADVANED APPLICATION

User Information Transfer

The SK2/SK5 supports the User Information Transfer function, and the enrolled user (cards, PINs) can be transferred from one (let's name it Master Unit) to another (let's name it Accept Unit)

Connection Diagram:

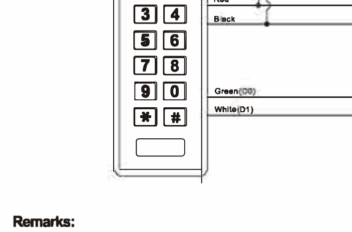

Remarks:
>The Master units and Accept units musht be SK2/SK5 or S-X series or Sboard.
> The Master Code of the Master Unit and the Accept Unit must beset to the same.
> Program the transfer operation on Master Unit only.
> If the Accept Unit is already with the users enrolled, it will be covered after transferring.
> For full 1000 users enrolled, the transfer takes 3 minutes.

Set Transferring on Master Unit:

Programming Step	Keystroke Combination
1. Enter the programming mode	* (Master Code) #
2. Set transferring	9 6 #
Within 3 minutes, Green LED shines, after one beep, the LED will turn into Red, which means the users' information has been transferred successfully.	
3. Exit	*

Interlock

The SK2/ SK5supports the Interlock funciton. It is of two keypads for two doors, and mainly used for banks, prisons, and other places where a higher level security is required.

Connection Diagram:

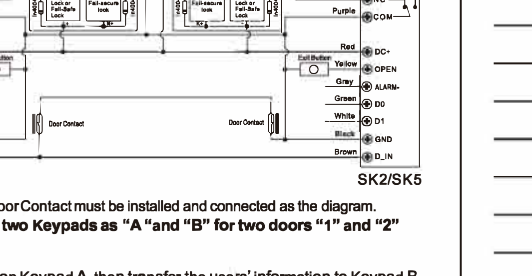

Remarks: The Door Contact must be installed and connected as the diagram.
Let's name the two Keypads as "A "and "B" for two doors "1" and "2"

Step 1:
Enroll the users on Keypad A, then transfer the users' information to Keypad B by "User Information Transfer" funciton.

Step 2:
Set both of the two Keypads (A and B) to Interlock function

Programming Step	Keystroke Combination
1. Enter Program Mode	* (Master Code) #
2. Interlocked-OFF **OR** 2. Interlocked-ON	9 0 # (factory default) 9 1 #
3. Exit	*

The interlock operation is finished,
When and only door 2 is closed, the user can read the valid card or input PIN on Keypad A, door 1 will open; then when and only door 1 closed, read valid card or input PIN on Keypad B, door2 will open.

Note:

Access Controller / Reader

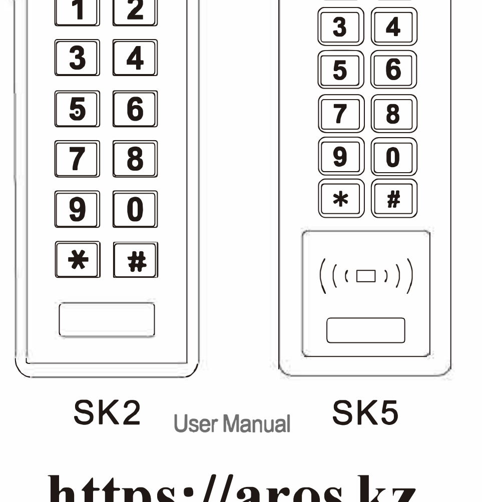

User Manual

https://aros.kz